FOLDING PARTITION ADDITION

OREM PARK 1, 4, 10

50 SOUTH 750 WEST
OREM, UTAH

OWNER:

THE CHURCH OF JESUS CHRIST
OF LATTER-DAY SAINTS
LYNN ADAMS, FACILITIES MANAGER

OREM CENTRAL FM GROUP
140 NORTH 400 WEST P.O. BOX 1497
OREM, UT 84097

PH. (801) 222-3130 FAX (801) 222-3132

ARCHITECT:

RVA ARCHITECTS, INC.
TRAVIS DANCE, PROJECT ARCHITECT

32 W. CENTER ST., SUITE 203
PROVO, UTAH 84601

PH. (801) 374-2100

CODE INFORMATION

EXISTING BUILDING

OCCUPANCY: A-3
TYPE CONSTRUCTION: TYPE V, 1 HOUR
FIRE PROTECTION: FIRE EXTING.

APPLICABLE CODES: 2015-IBC

INDEX TO DRAWINGS

A0	COVER SHEET	
	ARCHITECTURAL	
A1.1	DEMOLITION & REMODEL FLOOR PLANS, CEILING PLAN & DETAILS	

PROJECT LOCATION

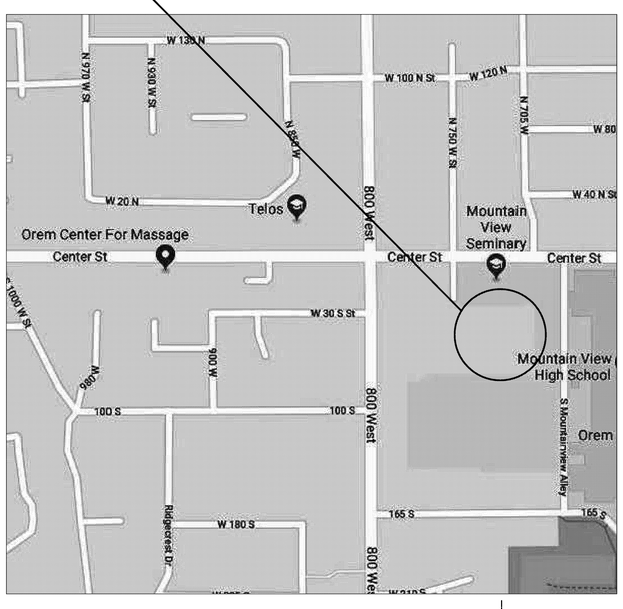

OREM VICINITY MAP

NORTH

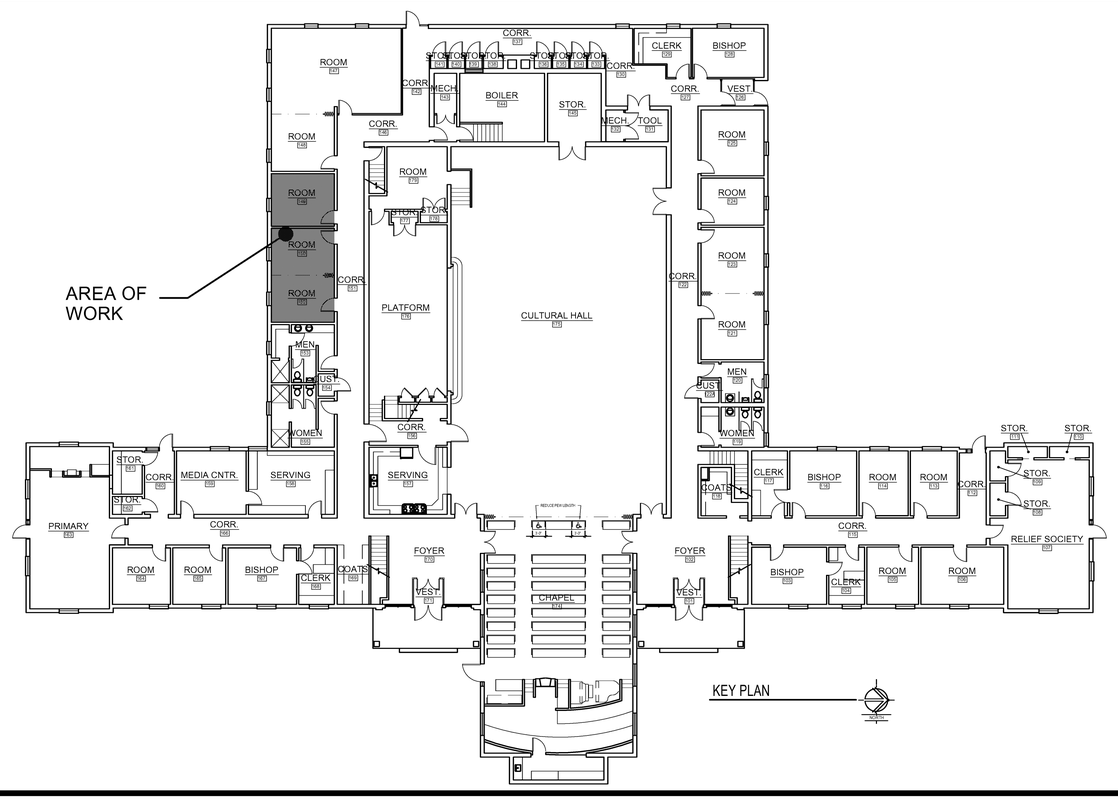

Architects
RVA • Architects • Inc.
ARCHITECTS • PLANNERS • 801.374.2100

No. 9167791030
Travis W. Dance
STATE OF UTAH

FOLDING PARTITION ADDITION
OREM PARK 1, 4, 10
50 SOUTH 750 WEST
OREM, UTAH

PROJECT FOR
THE CHURCH OF
JESUS CHRIST
OF LATTER-DAY SAINTS

MARK	DATE (D-M-Y)	DESCRIPTION

PROJECT NUMBER: 16-61
PLAN SERIES:
PROPERTY NUMBER: 505-0693
DATE: 05/03/2018
SHEET TITLE: COVER SHEET
SHEET: A0

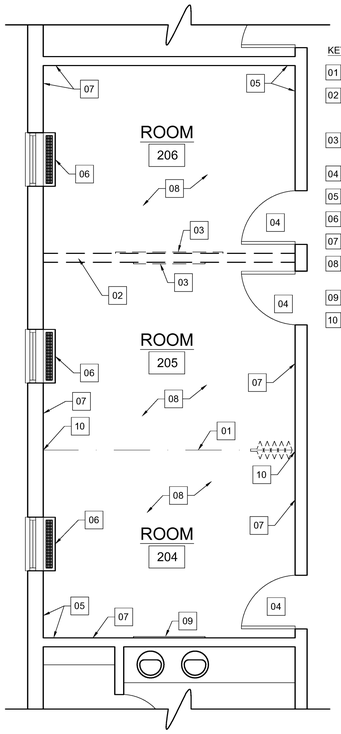

KEYED NOTES:

01 REMOVE & DISPOSE EXISTING FOLDING PARTITION & TRACK.

02 REMOVE & DISPOSE EXISTING 8" BLOCK WALL. WALL IS REINFORCED WITH #3 VERTICAL REBAR AT 24" O.C. CAST INTO FOOTING BELOW, & BOND BEAM AT CENTER & TOP OF WALL WITH (4) #5 REBAR.

03 REMOVE EXISTING CHALKBOARD AND SALVAGE FOR REINSTALLATION. SEE REMODEL PLAN.

04 EXISTING DOOR TO REMAIN.

05 EXISTING WALL TO REMAIN.

06 EXISTING WINDOW AND RADIATOR TO REMAIN.

07 EXISTING CHAIR RAIL TO REMAIN.

08 EXISTING CARPET & CARPET BASE TO REMAIN. PROTECT FROM DAMAGE.

09 EXISTING CHALKBOARD TO REMAIN.

10 EXISTING WOOD JAMB TO REMAIN.

DEMOLITION FLOOR PLAN

SCALE: ¼" = 1'-0"

NORTH

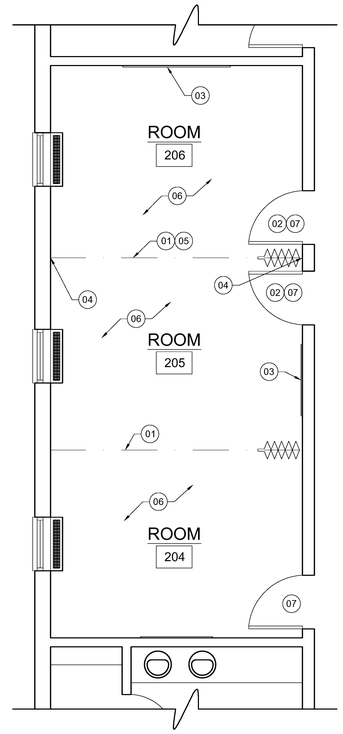

KEYED NOTES:

01 NEW FOLDING PARTITION.

02 INSTALL NEW OVERHEAD STOP AT EXISTING DOOR.

03 REINSTALL SALVAGED CHALKBOARD.

04 NEW 8" WOOD JAMB TO COVER AREA WHERE WALL REMOVED. MODIFY ENDS OF EXISTING CHAIR RAIL AS NECESSARY TO BUTT INTO WOOD JAMB.

05 PATCH & REPAIR CARPET & CARPET BASE WHERE WALL REMOVED.

06 PAINT EXISTING BLOCK WALLS.

07 PAINT EXISTING DOOR FRAMES.

REMODEL FLOOR PLAN

SCALE: ¼" = 1'-0"

NORTH

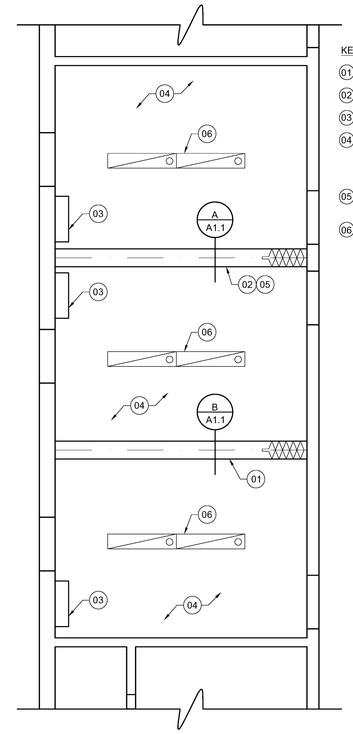

KEYED NOTES:

01 EXISTING HEADER TO REMAIN. SEE B/A1.1

02 NEW HEADER. SEE A AND C/A1.1.

03 EXISTING WALL MOUNTED HVAC UNIT TO REMAIN.

04 REMOVE EXISTING GLUE-UP CEILING TILE AND REPLACE WITH NEW. SEE D/A1.1 FOR EDGE DETAIL AT WALLS. EXISTING DRYWALL BACKER TO REMAIN. PATCH & REPAIR DRYWALL, OR FLOAT ENTIRELY, TO ENSURE SMOOTH SURFACE PRIOR TO INSTALLING TILE.

05 REMOVE PORTION OF EXISTING CEILING AS NECESSARY TO INSTALL NEW HEADER. PATCH AND REPAIR.

06 REMOVE AND REINSTALL LIGHT FIXTURES TO ACCOMMODATE CEILING TILE INSTALLATION.

CEILING PLAN

SCALE: ¼" = 1'-0"

NORTH

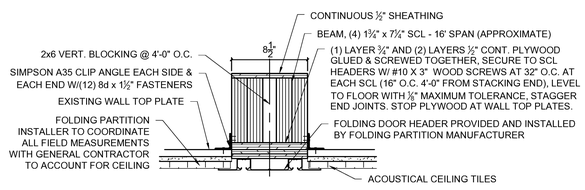

A NEW HEADER

SCALE: 1 ½" = 1'-0"

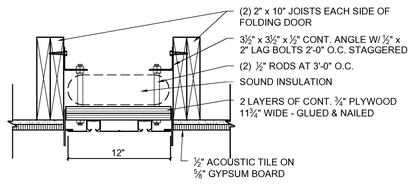

B EXISTING HEADER

SCALE: 1 ½" = 1'-0"

NOTE:
1. MODIFY EXISTING MID-SPAN CROSS BRACING AS NECESSARY.
2. EXISTING 2x6 CEILING FRAMING @ 16" O.C. TO REMAIN. NOTIFY ARCHITECT OF ANY CONFLICTS W/ NEW HEADER.

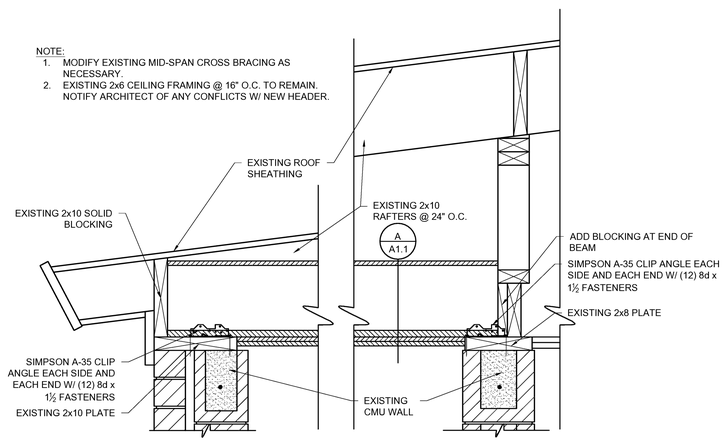

C NEW HEADER

SCALE: 1 ½" = 1'-0"

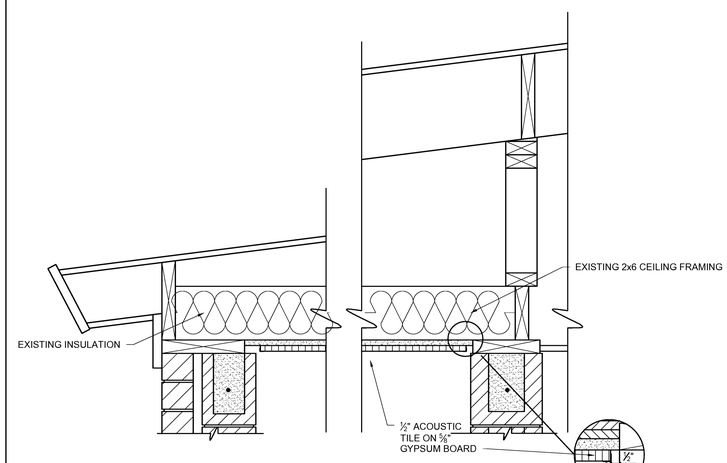

D CEILING DETAIL

SCALE: 1 ½" = 1'-0"

RVA Architects
RVA • Architects • Inc.
ARCHITECTS • PLANNERS • (801)374-2100

LICENSED ARCHITECT No. 9167791-0301 Travis W. Dance STATE OF UTAH

FOLDING PARTITION ADDITION
OREM PARK 1, 4, 10
50 SOUTH 750 WEST
OREM, UTAH

PROJECT FOR
THE CHURCH OF JESUS CHRIST OF LATTER-DAY SAINTS

MARK	DATE (D-M-Y)	DESCRIPTION

PROJECT NUMBER: 16-61
PLAN SERIES:
PROPERTY NUMBER: 505-0693
DATE: 05/03/2018
SHEET TITLE: FLOOR PLANS
SHEET: A1.1